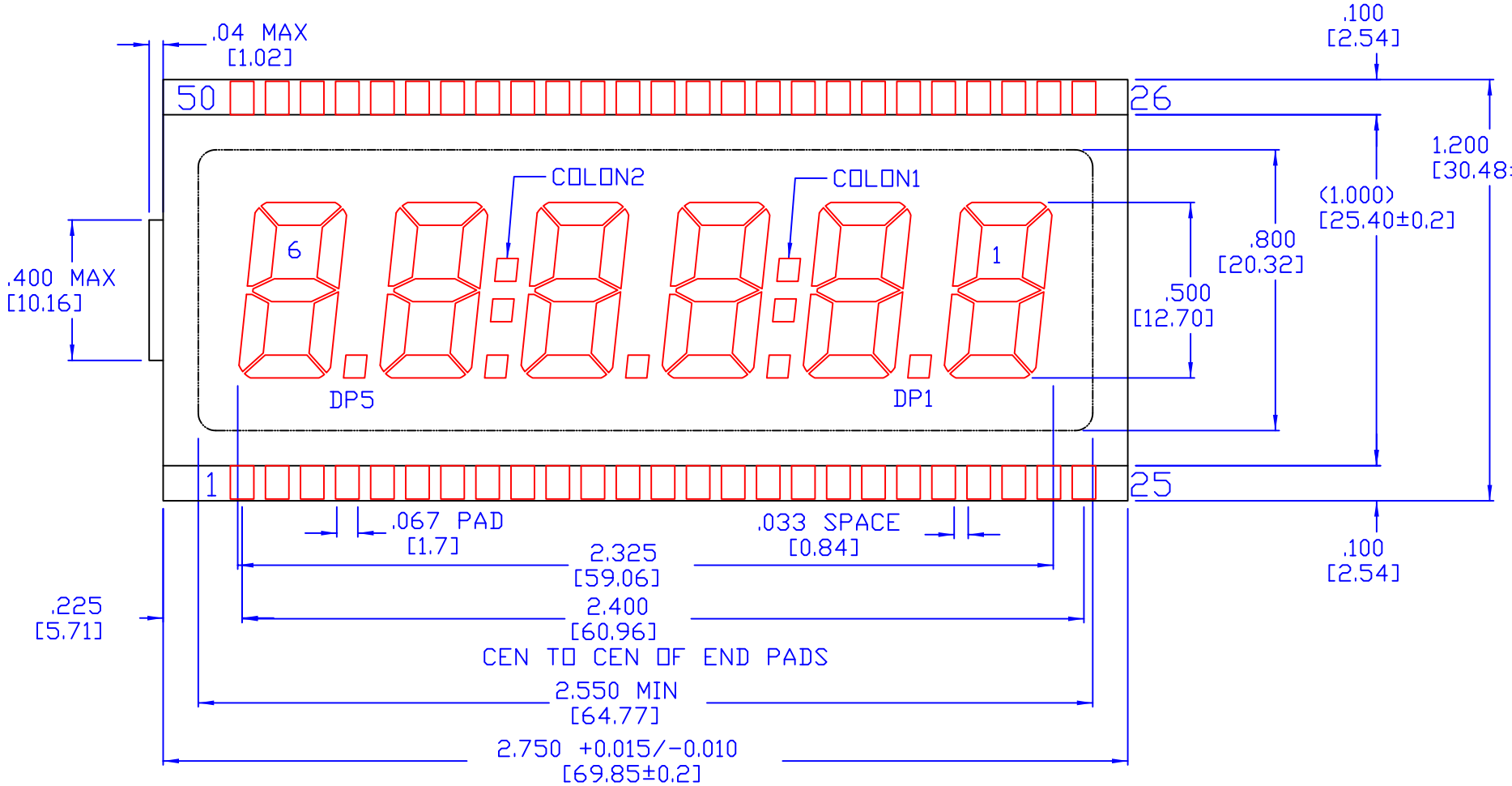


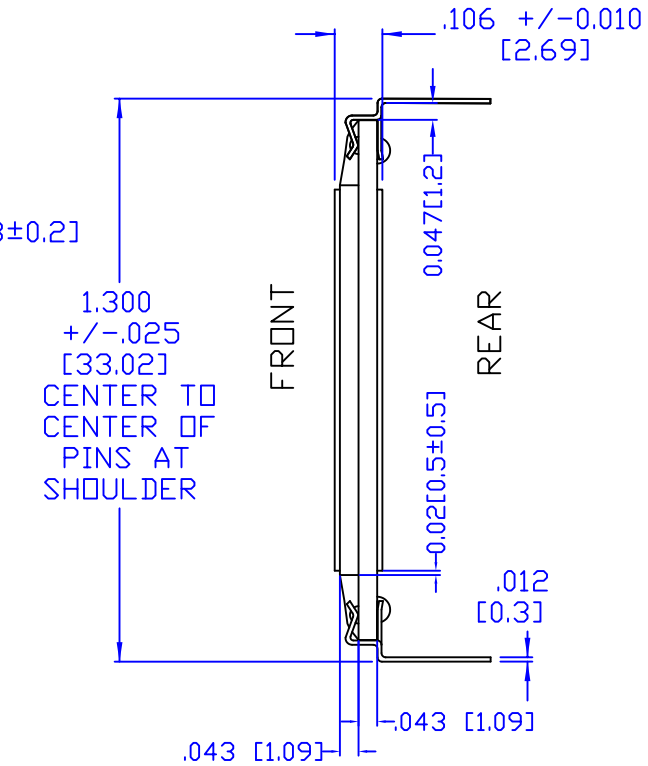


| PIN | FUNCT | PIN | FUNCT |
|---|---|---|---|
| 1 | BP | 50 | 6G |
| 2 | 6E | 49 | 6F |
| 3 | 6D | 48 | 6A |
| 4 | 6C | 47 | 6B |
| 5 | DP5 | 46 | 5G |
| 6 | 5E | 45 | 5F |
| 7 | 5D | 44 | 5A |
| 8 | 5C | 43 | 5B |
| 9 | DP4 | 42 | COLON2 |
| 10 | 4E | 41 | 4G |
| 11 | 4D | 30 | 4F |
| 12 | 4C | 39 | 4A |
| 13 | DP3 | 38 | 4B |
| 14 | 3E | 37 | 3G |
| 15 | 3D | 36 | 3F |
| 16 | 3C | 35 | 3A |
| 17 | DP2 | 34 | 3B |
| 18 | 2E | 33 | COLON1 |
| 19 | 2D | 32 | 2G |
| 20 | 2C | 31 | 2F |
| 21 | DP1 | 30 | 2A |
| 22 | 1E | 29 | 2B |
| 23 | 1D | 28 | 1G |
| 24 | 1C | 27 | 1F |
| 25 | 1B | 26 | 1A |

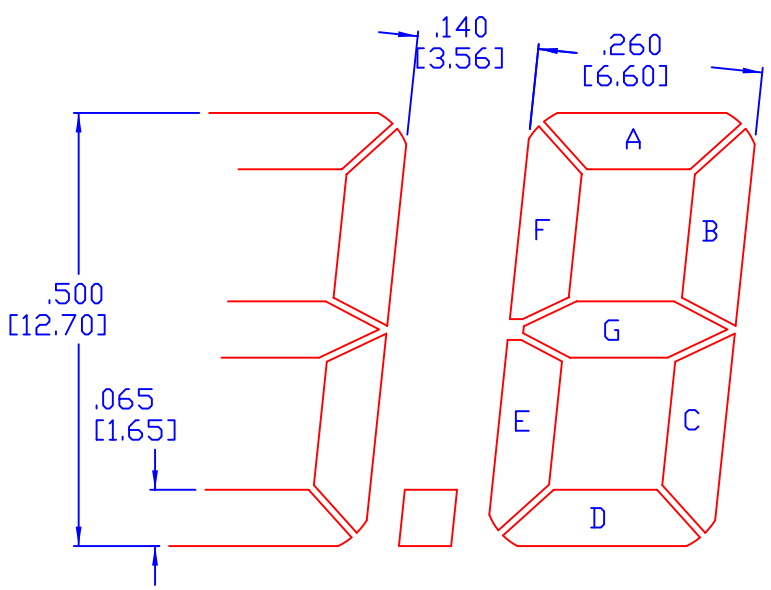


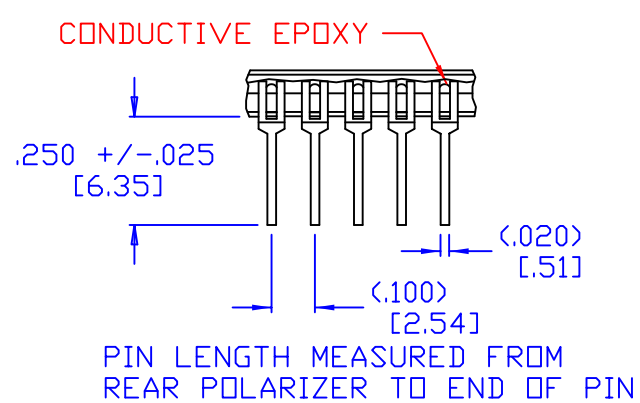


NOTES:

1. DISPLAY: TN, REFLECTIVE, POSITIVE IMAGE (BLACK CHARACTERS - LIGHT BACKROUND).
2. VOLTAGE: VOP=5.0V STATIC
3. OPERATING TEMP: -40 TO +113 DEG C.
4. WIDE FIELD OF VIEW.
5. VIEW ANGLE: 1:30
6. FRONT POLARIZER TO BE VERTICAL TO BE COMPATIBLE WITH POLARIZED SUNGLASSES.
7. RoHS

DO NOT SCALE

LXD LIQUID CRYSTAL DISPLAYS
www.lxdinc.com
7300 ACC BLVD.
RALEIGH, NC. 27617
(919) 600-6440
(800) 786-8710

INFORMATION CONTAINED HEREIN IS PROPRIETARY TO LXD, AND MAY NOT BE USED OR DISCLOSED WITHOUT THE PERMISSION OF LXD

UNLESS OTHERWISE SPECIFIED TOLERANCES ARE: MM ±0.25 INCH ±0.01

DESCRIPTION: 0.5 x 6 DIGITS

PART NUMBER: H0060B

DRAWING: 2386 REV: A

DRAWN: LJO DATE: 02/22/2005 SHEET: 1 OF 1